Tel. +34 932 681 833 · Fax +34 932 683 292
www.fuiberica.com · fuiberica@fuiberica.com

EMBRAGUES ELECTROMAGNÉTICOS DE MUELLE NEGATIVOS

EMC-N/L

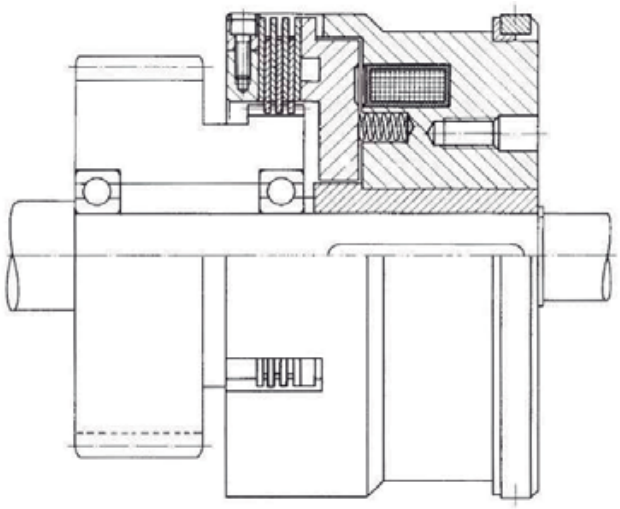

www.fuiberica.com
fuiberica@fuiberica.com
+34 93 268 18 33

ELECTROMAGNETIC DISK-TYPE SPRING LOADED BRAKES AND CLUTCHES

Spring-loaded brakes provide instantaneous locking of the machinery or a part of it in case of power failure, planned or unexpected.

These brakes, which have disk packs, can work either dry or in an oil bath; for vertical axis mounting, please contact our Technical Department.

The closure of the disk pack is produced by the thrust springs, activated when there is an interruption of electrical power. If the power comes back on, the coil is energized and disengages the brake; this same principle is used in the clutch design: the only difference is the way the power is fed to the unit, the clutch having a collector ring mounted on top of the magnet.

Both brakes and clutches have to be installed to permit easy access for any adjustments that may be required at any time, usually due to the dynamic usage of the groups: frequent dynamic engagements causes disk wear and makes increase the space between the armature and the magnet; the air gap adjustment is necessary to restore the correct functioning.

ELECTROMAGNETIC CONTROL

*These brakes and clutches are conformal to **VDE 0580 NORMS***

POWER SUPPLY

*As a standard, these units operate on **24 V DC -0 +15%**.*
On request, different voltages are available

MOUNTING AND AIR GAP ADJUSTMENT

- *For assembly, please follow the instructions and examples given.*
- *To adjust the air gap, follow the procedure described below:*
  - *Apply the correct tension to the brake or clutch*
  - *Remove the screw **(8)***
  - *Remove the blocking key **(7)***
  - *Turn the lock nut **(6)** clockwise until the disks are blocked **(4-5)***
  - *Turn the lock nut **(6)** counterclockwise about 90°, choosing the notch in excess corresponding to the magnet notch **(1)***
  - *Re-insert the key **(7)** and lock it into position with the screw **(8)***
  - *Make sure that the hub **(12)** rotates freely*
  - *Once the adjustment has been completed, make some test movements before beginning the work cycle*

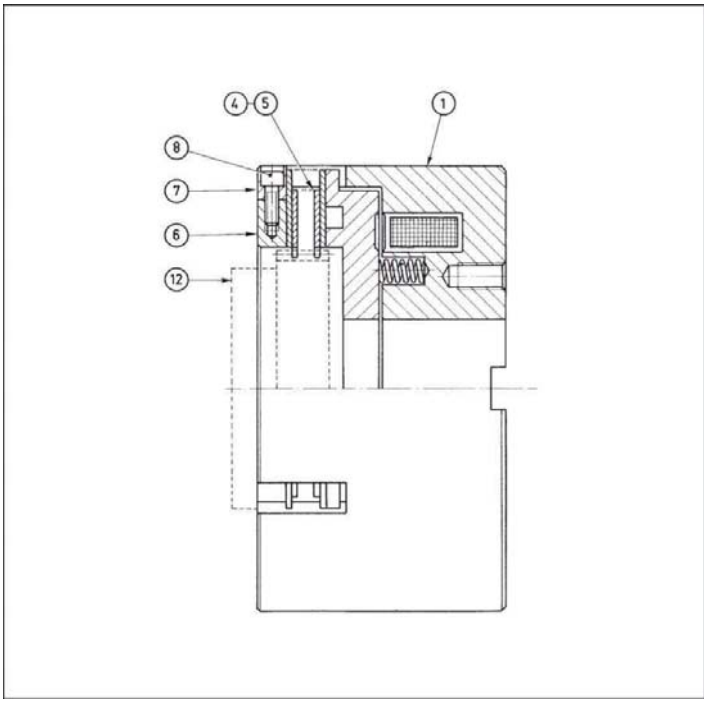

	ELECTROMAGNETIC DISK-TYPE SPRING LOADED BRAKES AND CLUTCHES	EMC-N/L	06

EMC-N/L

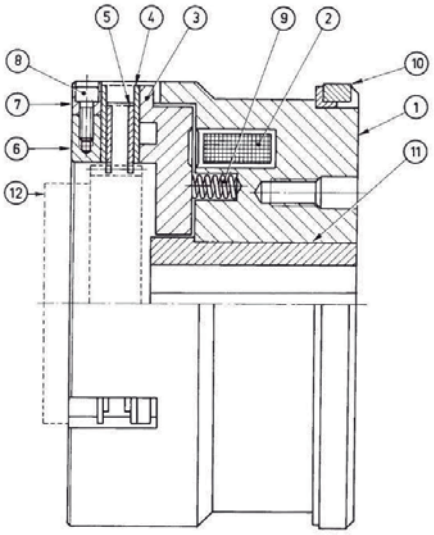

PARTS LIST

1. ***MAGNET CUP***
2. ***COIL***
3. ***ARMATURE***
4. ***OUTER DISK***
5. ***INNER DISK***
6. ***ADJUSTMENT RING***
7. ***LOCK KEY***
8. ***RING LOCK SCREW***
9. ***THRUST SPRING***
10. ***COLLECTOR RING***
11. ***CENTRAL HUB***
12. ***TOOTHED HUB (on demand)***

EXAMPLES OF MOUNTING

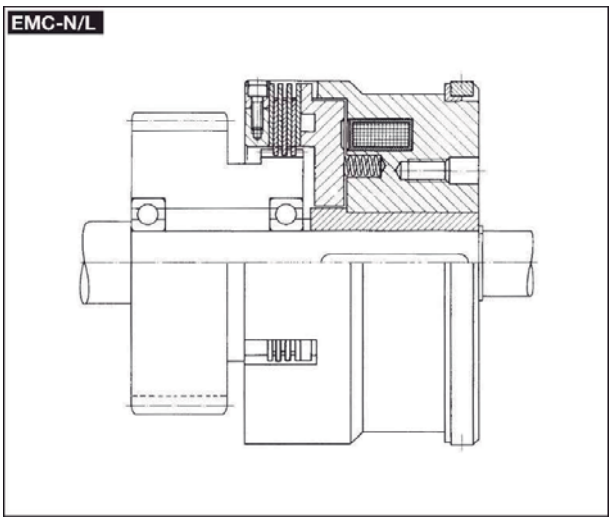

	ELECTROMAGNETIC DISK-TYPE SPRING LOADED CLUTCHES	EMC-N/L	06

MODEL	EMC-N □□□/L
CODE	06.01.□□□.01

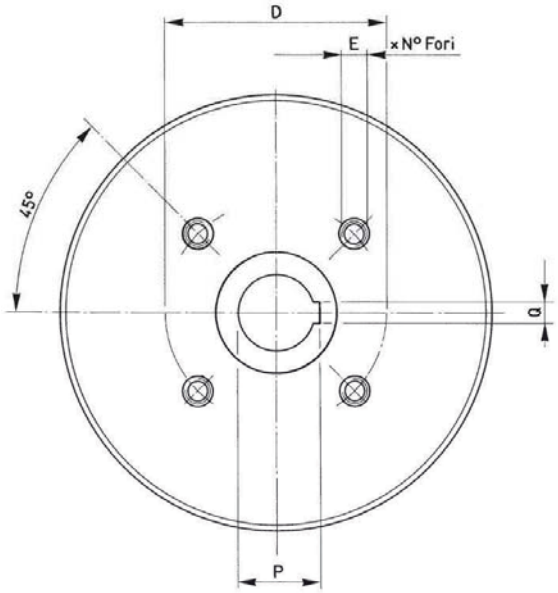

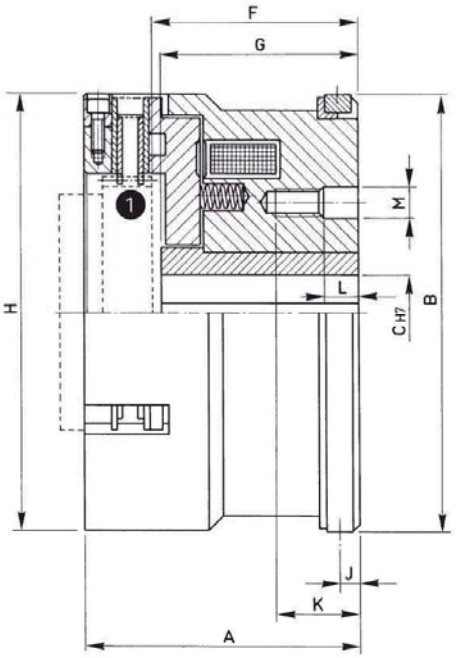

□□□	Torques Mi (Nm)	Torques Ms (Nm)	R.P.M. max. Oil	R.P.M. max. Dry	Build up time ms	Decay time ms	WATT 20 °C	WATT 120 °C	Weight Kg	Inter. plates N.	Hub ❶
114	25	40	2800	800	120	70	60	43	5	2	MDF-N 114
140	50	70	2200	600	200	80	74	53	7	2	MDF-N 140
166	100	140	1800	400	280	90	98	70	13	3	MDF-N 166

□□□	A	B	C	D	E N°xø	F	G	H	J	K	L	M	P	Q
114	84	114	25	58	4xM8	69	65	114	6	23	10	8,5	26,7	8
140	93	140	30	72	4xM8	74	71	140	7	27	13	8,5	31,7	8
166	104	166	30	84	4xM10	79	76	165	7	28	13	10,5	31,7	8

Tel. +34 932 681 833 · Fax +34 932 683 292
www.fuiberica.com · fuiberica@fuiberica.com

EMBRAGUES ELECTROMAGNÉTICOS DE MUELLE NEGATIVOS

EMC-N

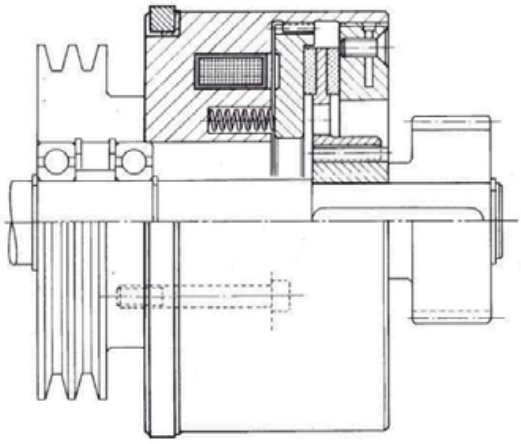

GENERAL FEATURES

These brakes and clutches are designed for dry operation only. They provide the special advantage of transmitting very little play - a matter of a few tenths of a degree - in the engaged position. Therefore, they are very suitable for providing advancement using circulating-ball screw drives.

This type of units consists of:

- *Magnet cup*
- *Armature with friction lining.*
- *Brake disk, with toothed hub*
- *Threaded adjustment ring with friction lining.*

Both brakes and clutches share the same functioning principle: in normal position, the brake disk is held clamped between the two friction linings (the armature's and the threaded ring's) by the action of the thrust springs located in the magnetic cup, linking the driven shaft to the driver one. When current is supplied to the coil, the armature is attracted to it and disengages the brake disk.

As for brakes, because this type are intended mainly for safety use or, better, for blockage, they should be used preferably when the kinematics is stopped.

ELECTROMAGNETIC CONTROL

*These brakes and clutches are in accordance with **VDE 0580 NORMS***

POWER SUPPLY

*Standard supply voltage is **24 V DC -0 +15%**.*
On request, different voltages are available.

MOUNTING AND MAINTENANCE
(For Series EMC-N, EMF-N models)

For mounting, please follow the instructions and examples given

1. *Remove the toothed hub **(7)** from the complete unit.*
2. *Mount the brake or clutch unit to the machine using the «**D H7**» alignment reference and inserting the mounting screws in the «**L**» holes on the «**K**» diameter.*
3. *Apply the correct voltage to permit the coil to disengage the brake disk **(5)***
4. *Mount the hub **(7)** onto the shaft, matching the teeth of the brake disk **(5)***
5. *When the hub **(7)** is axially inserted into the teeth of the brake disk **(5)**, secure it onto the shaft.*
6. *Now turn off the power to engage the complete unit. Then turn it back on to disengage it. Repeat this operation two or three times. If the unit functions correctly, it can be put into service.*

AIR GAP ADJUSTMENT

*If you need to adjust the air gap "**S**", proceed as follows:*

- *Loosen screws **(8)***
- *Send the correct voltage to the coil.*
- *Turn the ring **(6)** clockwise and form a pack of the system consisting of parts **4-5** and **6**.*
- *Turn the adjustment ring **(6)** counterclockwise through an angle between 60° and 90°, using the predetermined reference points as a guide.*
- *Turn off the power.*
- *Tighten down the screws **(8)** to lock the ring **(6)***
- *The unit is now adjusted. Turn the power off and on two or three times to check for correct functioning.*

Avoid oil or grease come in contact with the friction lining surfaces. If it should happen, remove the oil or grease with a cloth lightly moistened with cleaning fluid or gasoline.

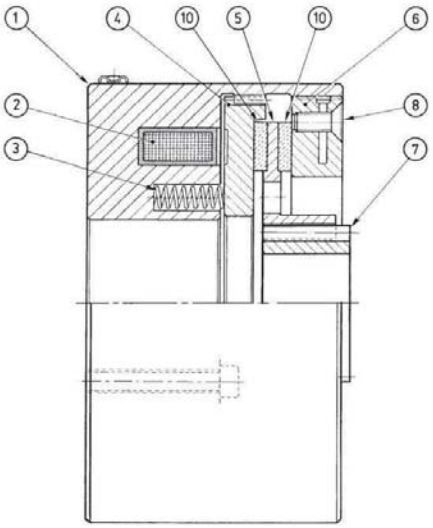

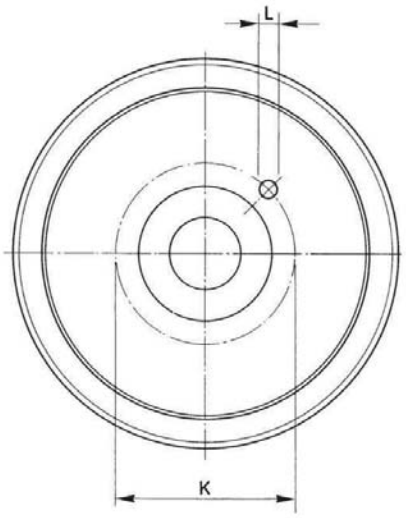

EMC-N

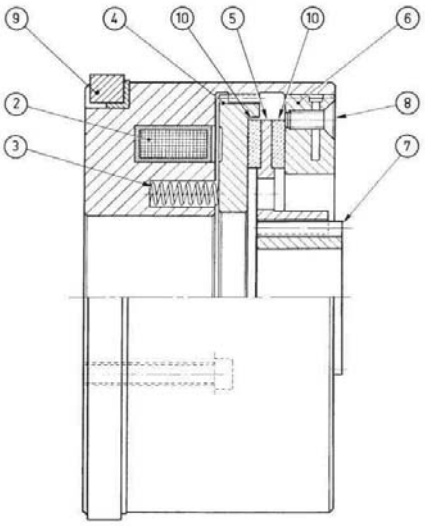

PARTS LIST

1. *MAGNET CUP*
2. *COIL*
3. *THRUST SPRING*
4. *ARMATURE*
5. *BRAKE DISK*
6. *ADJUSTMENT RING*
7. *TOOTHED HUB*
8. *RING LOCK SCREWS*
9. *COLLECTOR RING*
10. *FRICTION LININGS*

EXAMPLES OF MOUNTING

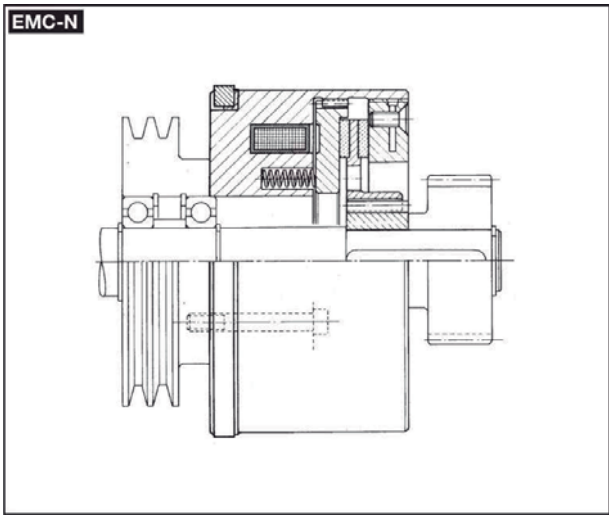

	ELECTROMAGNETIC SINGLE-DISK SPRING LOADED CLUTCHES	EMC-N	12

MODEL	EMC-N □□□
CODE	12.01.□□□.01

S = Traferro / *Air gap*

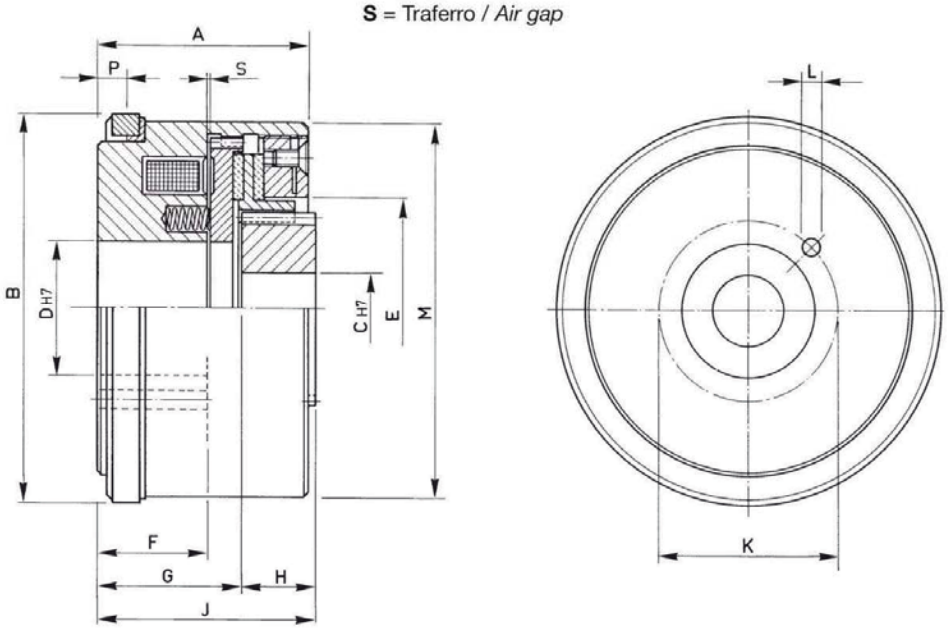

□□□	Torque Ms (Nm)	Build up time ms	Decay time ms	Watt 20°	Watt 120°	Weight Kg
114	25	115	38	55	39,6	4,3
140	50	145	42	64	40,1	6
166	100	165	54	78	56,2	9
195	150	205	70	90	64,8	14

□□□	A	B	C Min.	C Max.	D	E	F	G	H	J	K	L N°xø	M	P	S Max.
114	70	114	15	24	40	66	38	49	20	69	52	3x5,5	110	10	0,3
140	76	140	20	32	50	80	40	53	21	74	65	3x6,5	135	11	0,3
166	80	166	25	50	65	100	40	60	26	86	87	4x6,5	160	11	0,4
195	85	195	30	68	90	130	40	57	28	85	105	6x6,5	195	12	0,4